Data-based Exclusive Gateway (XOR)

- **Exclusive gateway:** An exclusive gateway (also called the XOR gateway or, in more technical terms, the exclusive data-based gateway), is used to model a decision in the process. When the execution arrives at this gateway, all outgoing sequence flows are evaluated in the order in which they have been defined. The sequence flow which condition evaluates to 'true' (or which doesn't have a condition set, conceptually having a 'true' value defined on the sequence flow) is selected for continuing the process.
- **Only one sequence flow:** Note that only one sequence flow is selected when using the exclusive gateway. In case multiple sequence flow have a condition that evaluates to 'true'.
- **Runtime exception:** If no sequence flow can be selected (no condition evaluates to 'true') this will result in a runtime exception, unless you have a default flow defined. One default flow can be set on the gateway itself in case no other condition matches - like an 'else' in programming languages.

Exercise:

1. **We will model below process to demonstrate use of exclusive OR gateways.**

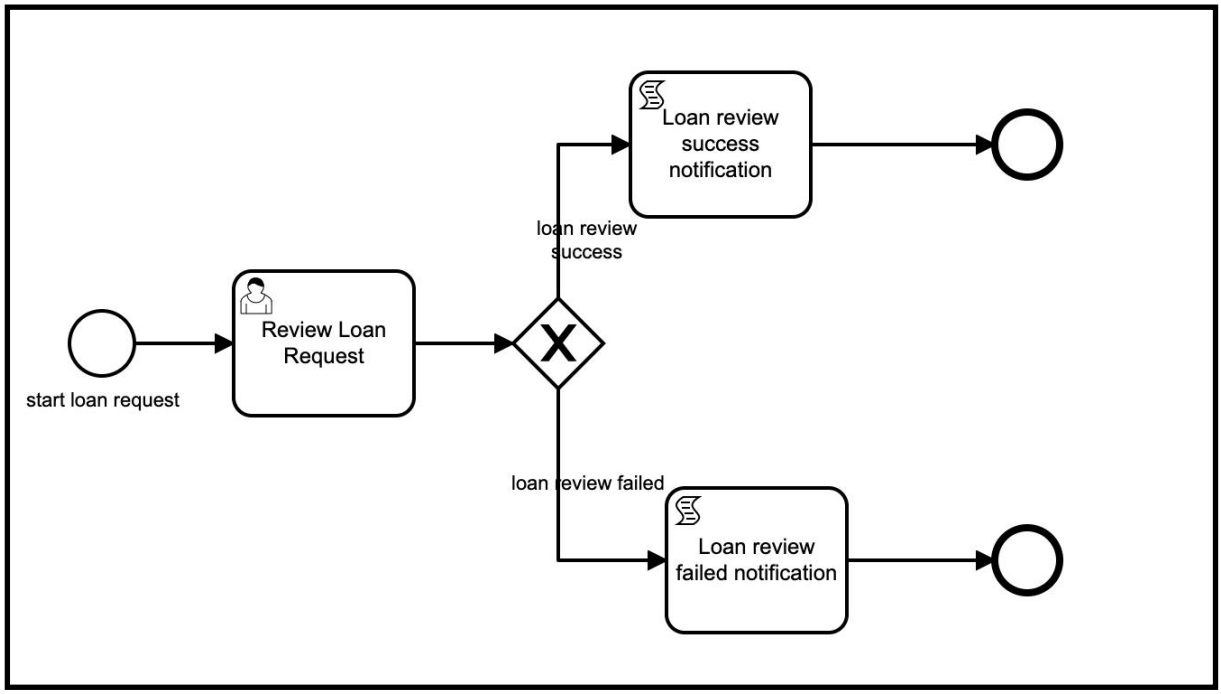

Process properties:

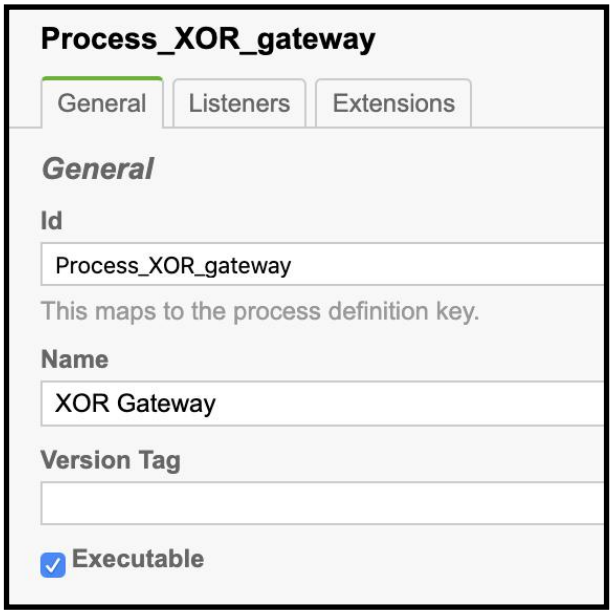

Id: Process_XOR_gateway

Name: XOR Gateway

2. Start event "Start loan request".

Configure start event form to apply loan request.

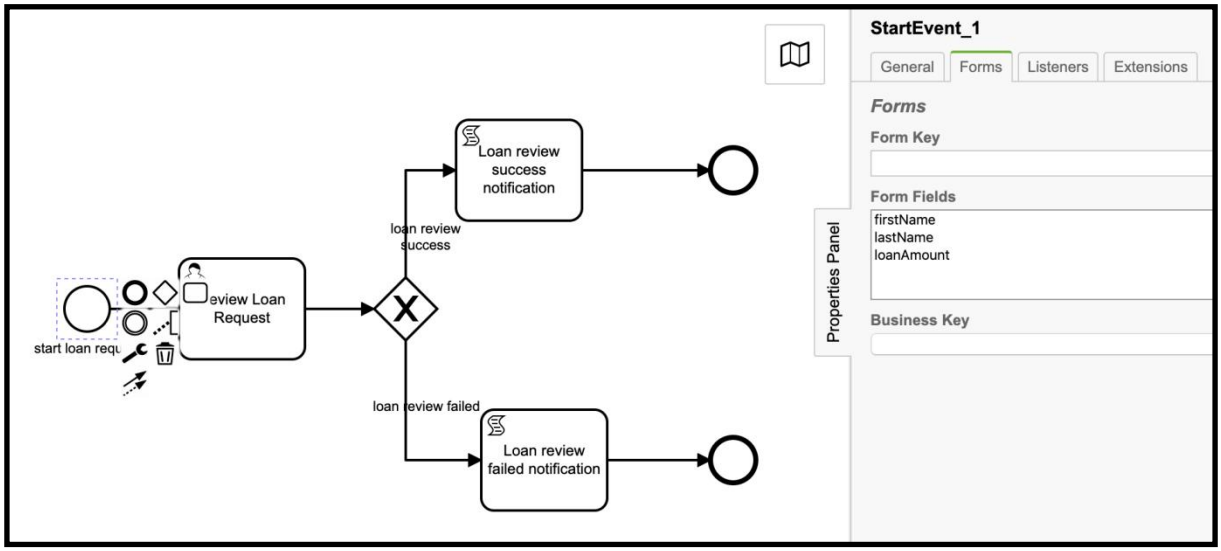

3. User task Review Loan Request

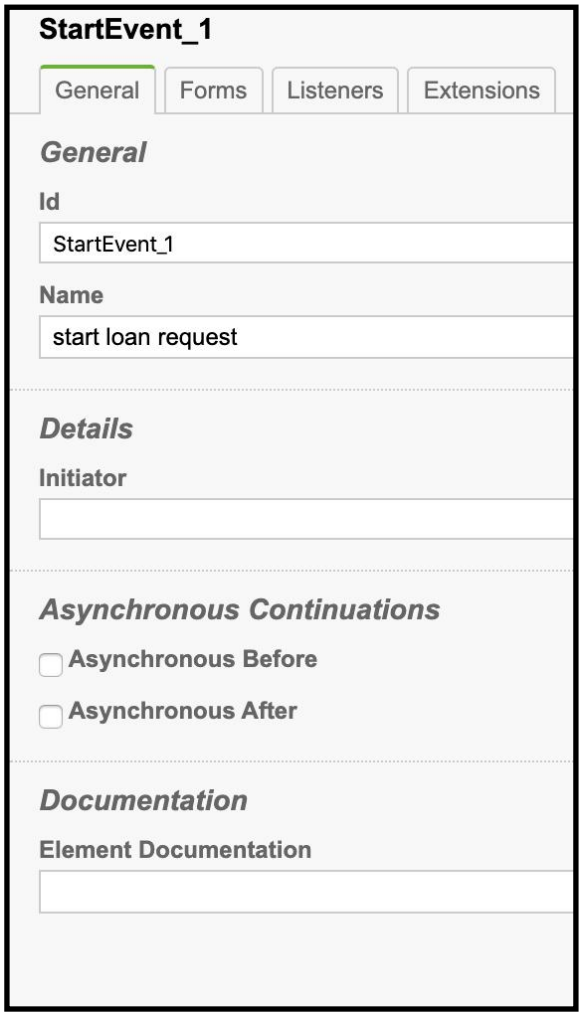

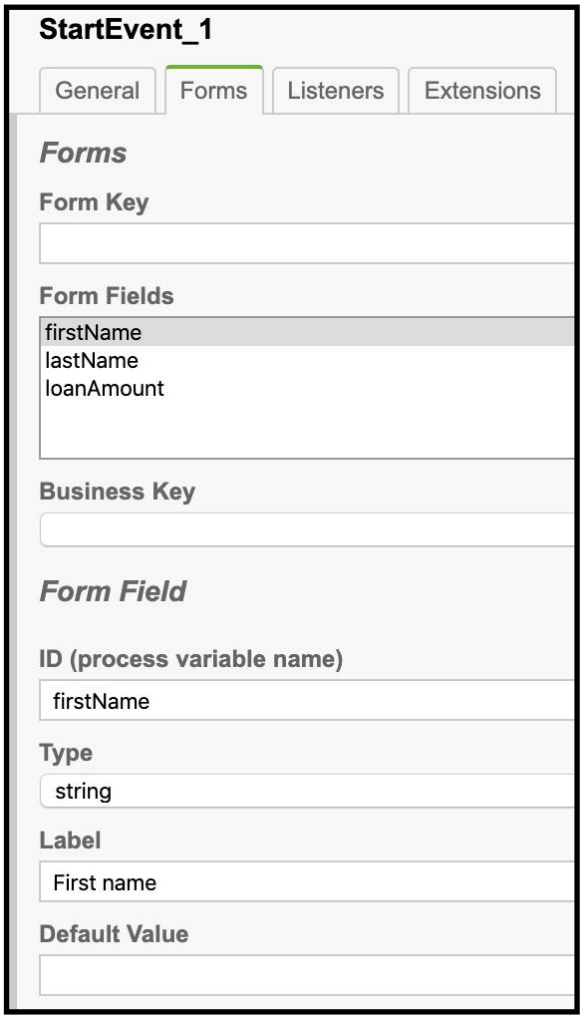

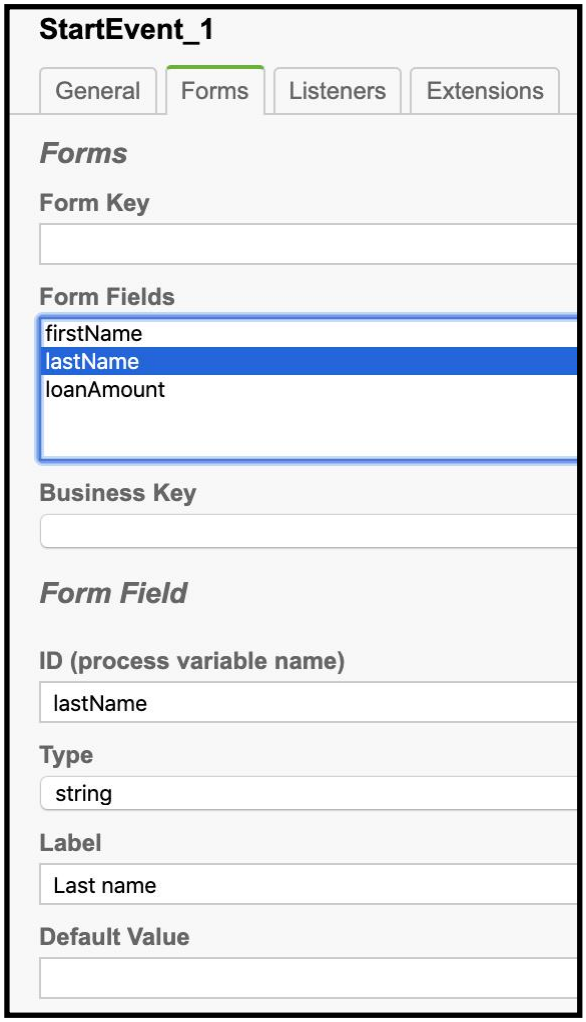

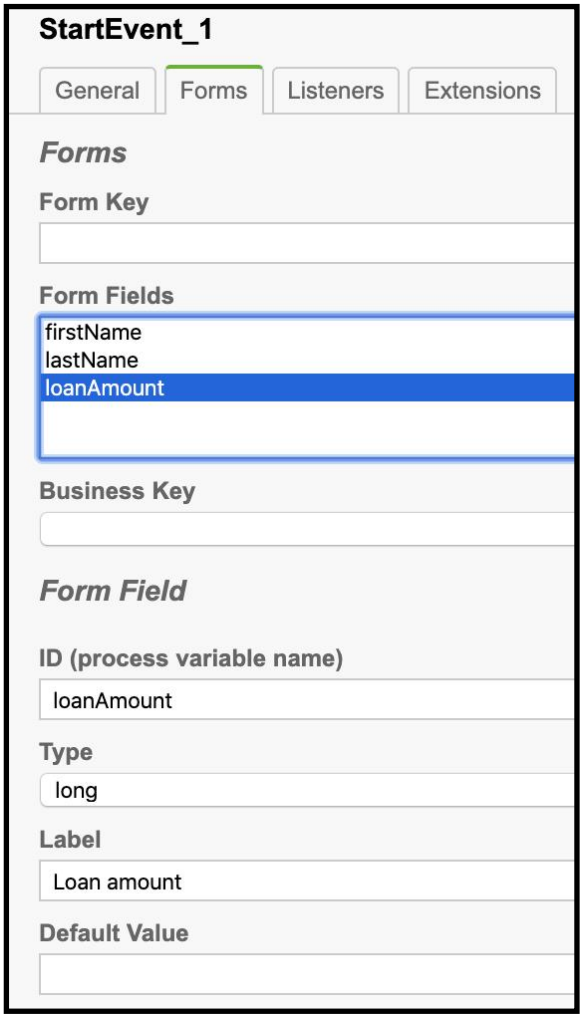

Configure user task form to review loan request.

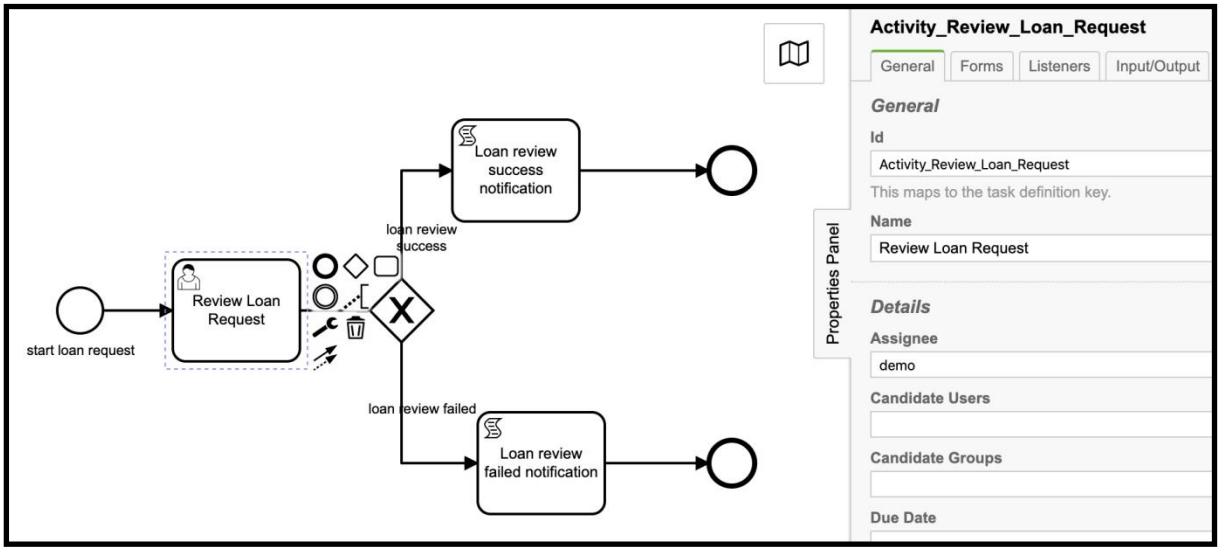

User task properties: (General tab)

Id: Activity_Review_Loan_Request

Name: Review Loan Request

Assignee: demo

User task form properties: (Form tab)

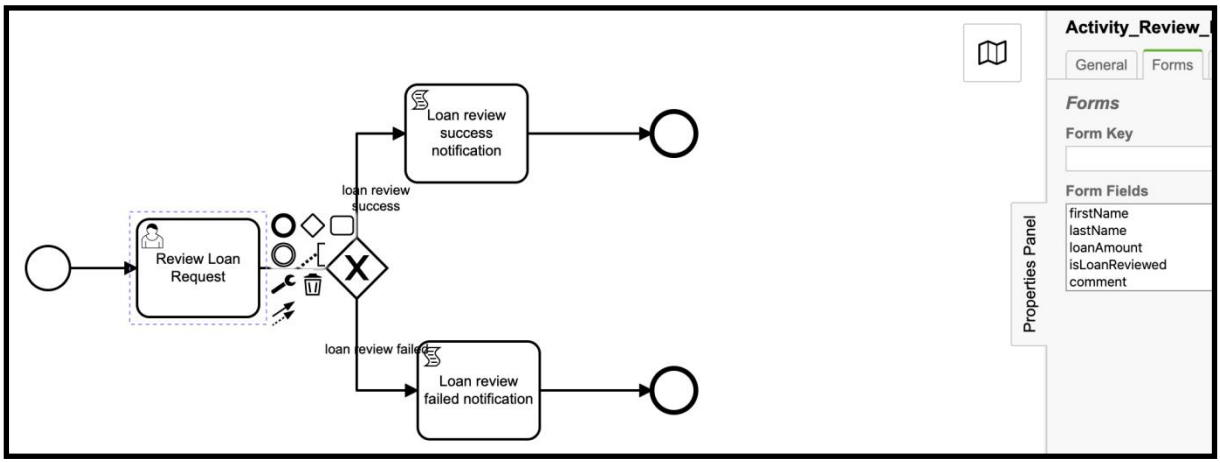

For review load request user task, form fields firstName, lastName, loanAmount marked as readonly as these fields value are are to be provided by loan requester and loan review is not going to update these fields value. Reviewer should be able to enter values for fields isLoanReviewed and comment.

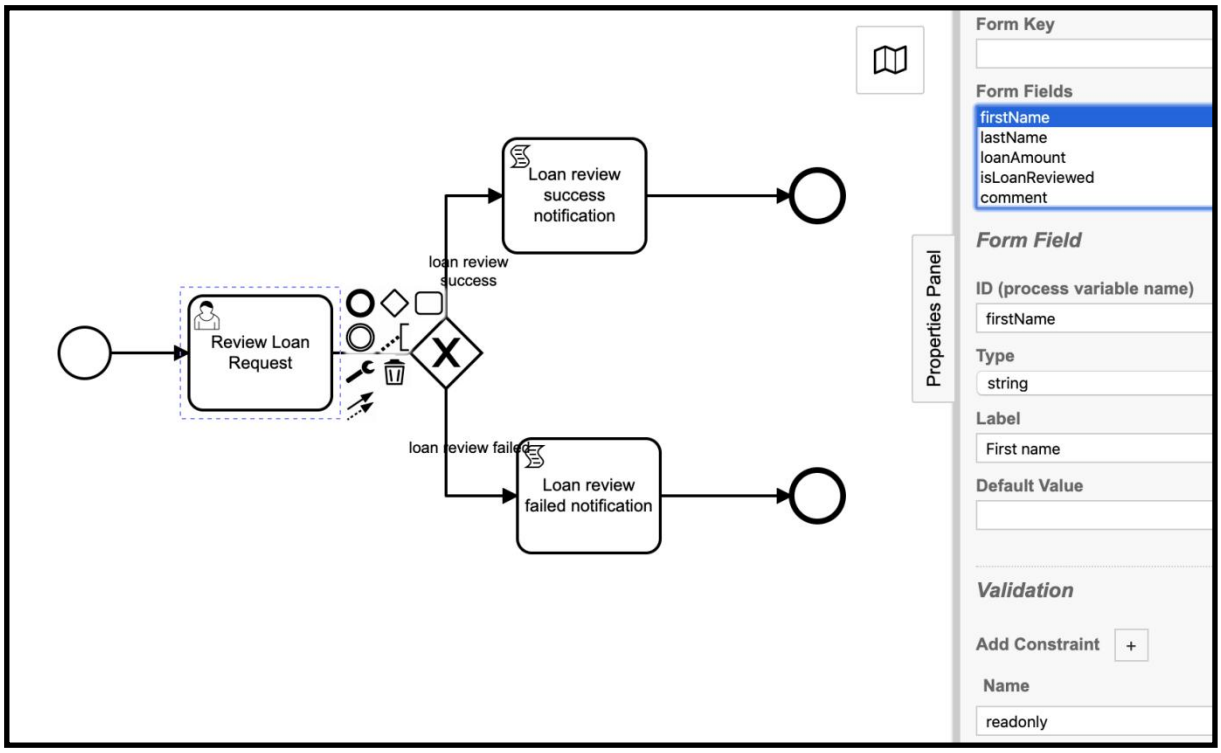

Base on the loan reviewer input, process will take decision through XOR gateway to notify loan requester about the success or rejection of loan request review.

Constraint

Loan review success:

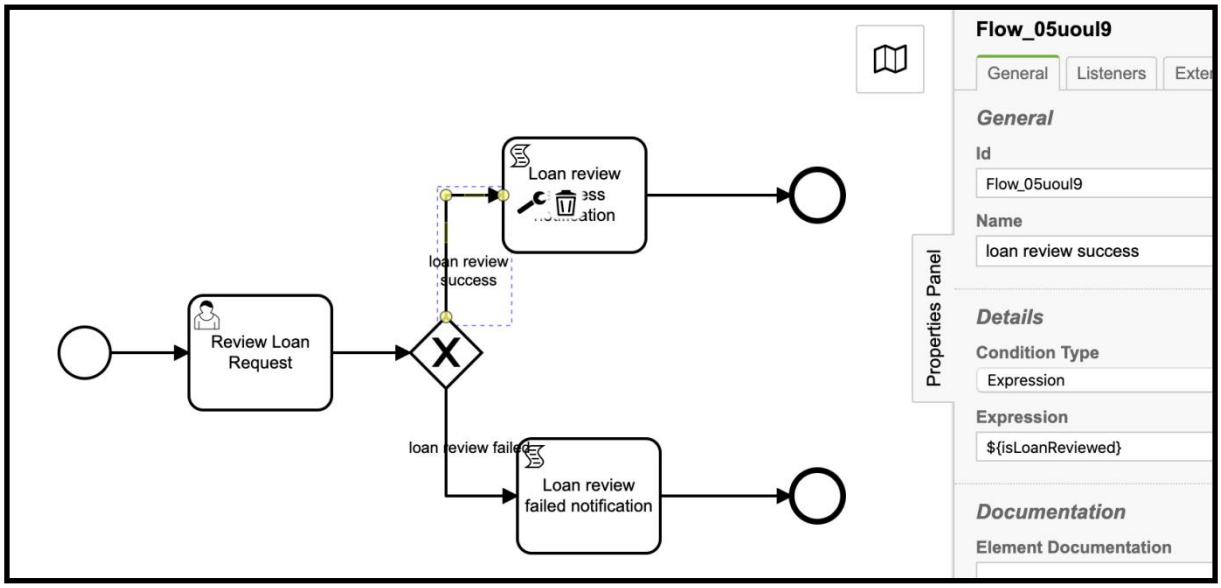

Id: Flow_05uoul9

Name: loan review success

Content Type: Expression

Expression: ${isLoanReviewed}

Loan review failure:

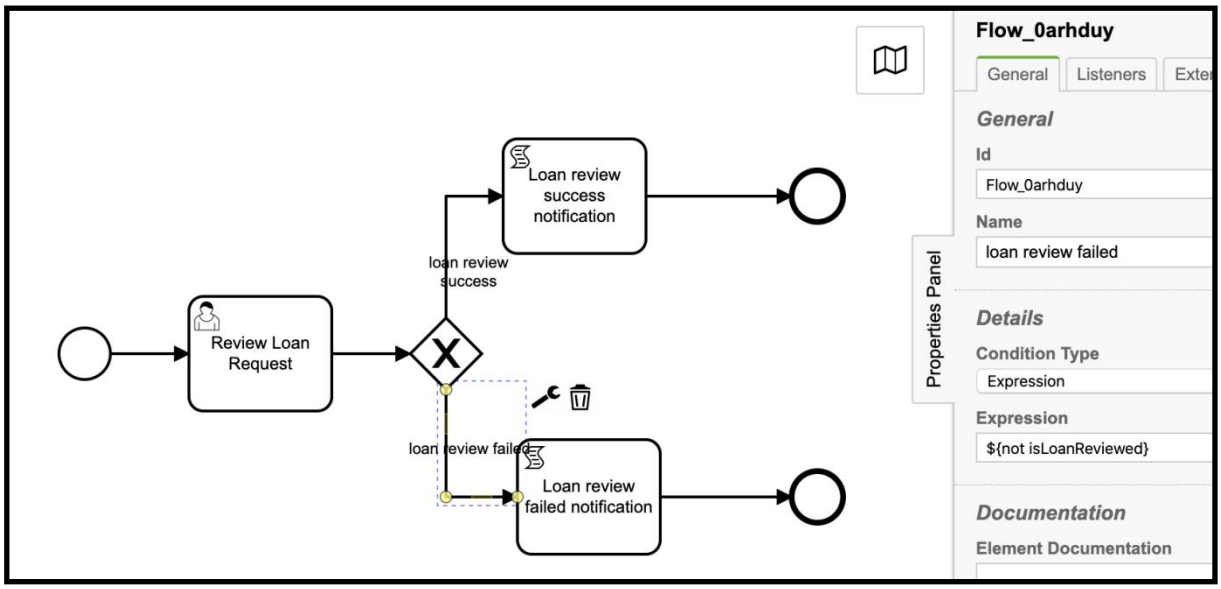

Id: Flow_0arhduy

Name: loan review failed

Content Type: Expression

Expression: ${not isLoanReviewed}

Script task: Loan review success notification

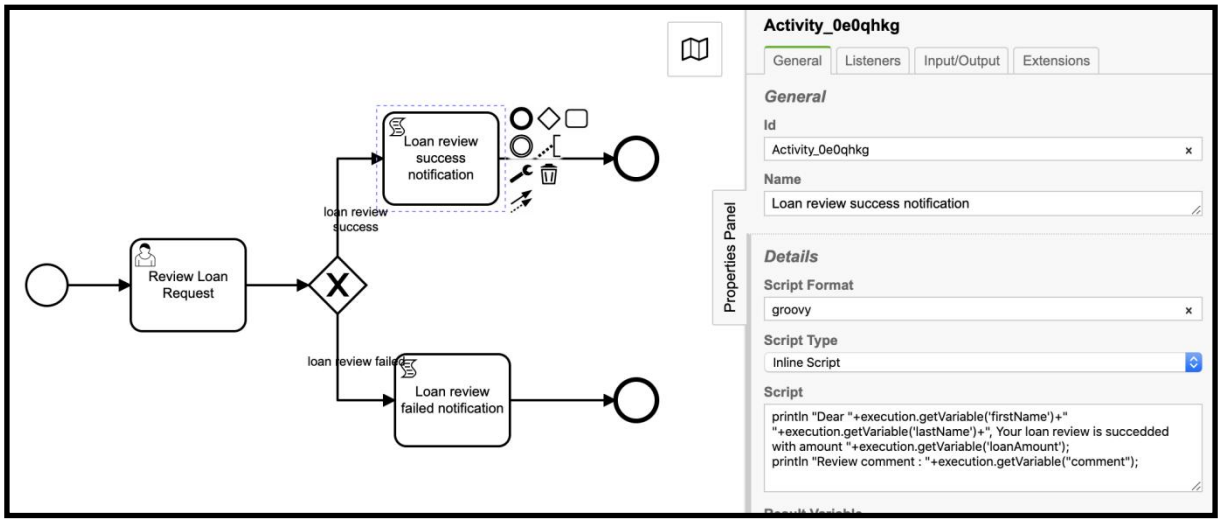

Id: Activity_0e0qhkg

Name: Loan review success notification

Script Format: groovy

Script Type: Inline Script

Script:

```
println "Dear "+execution.getVariable('firstName')+" "+execution.getVariable('lastName')+", Your loan review is succedded with amount "+execution.getVariable('loanAmount');

println "Review comment : "+execution.getVariable("comment");
```

Script task: Loan review failed notification

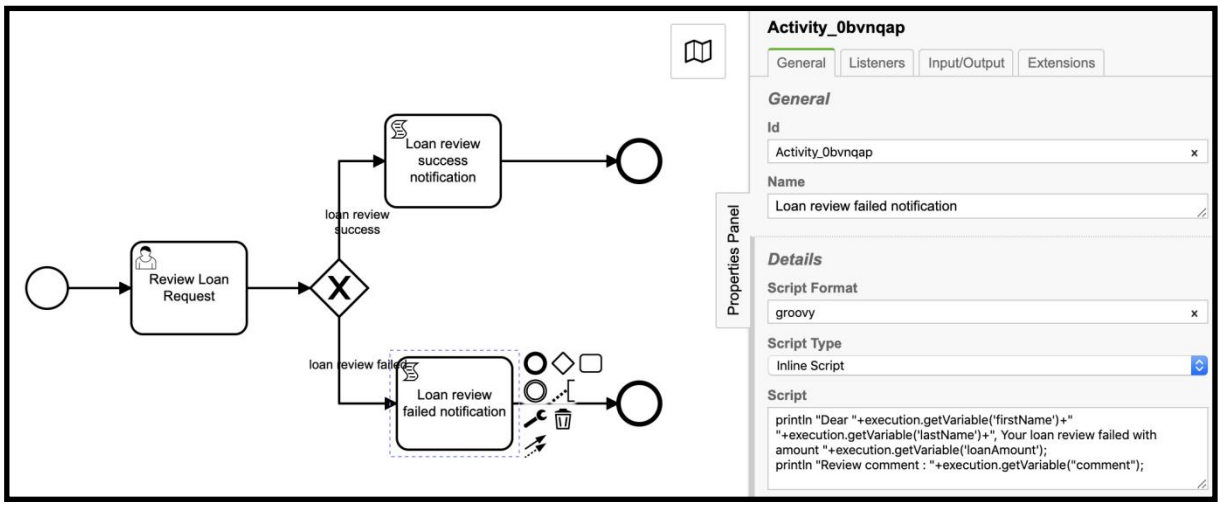

Id: Activity_0bvnqap

Name: Loan review failed notification

Script Format: groovy

Script Type: Inline Script

Script:

```
println "Dear "+execution.getVariable('firstName')+" "+execution.getVariable('lastName')
+", Your loan review failed with amount "+execution.getVariable('loanAmount');

println "Review comment : "+execution.getVariable("comment");
```

Deploy and start the process:

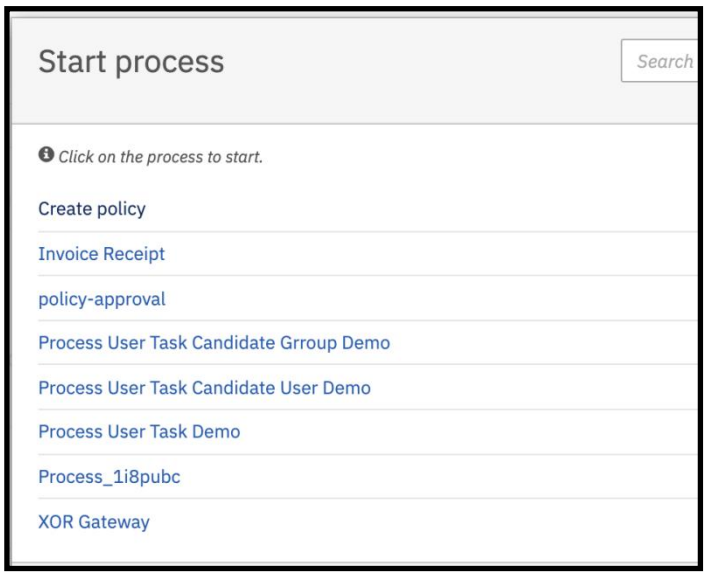

Hit the XOR Gateway. It will open start request loan form as below.

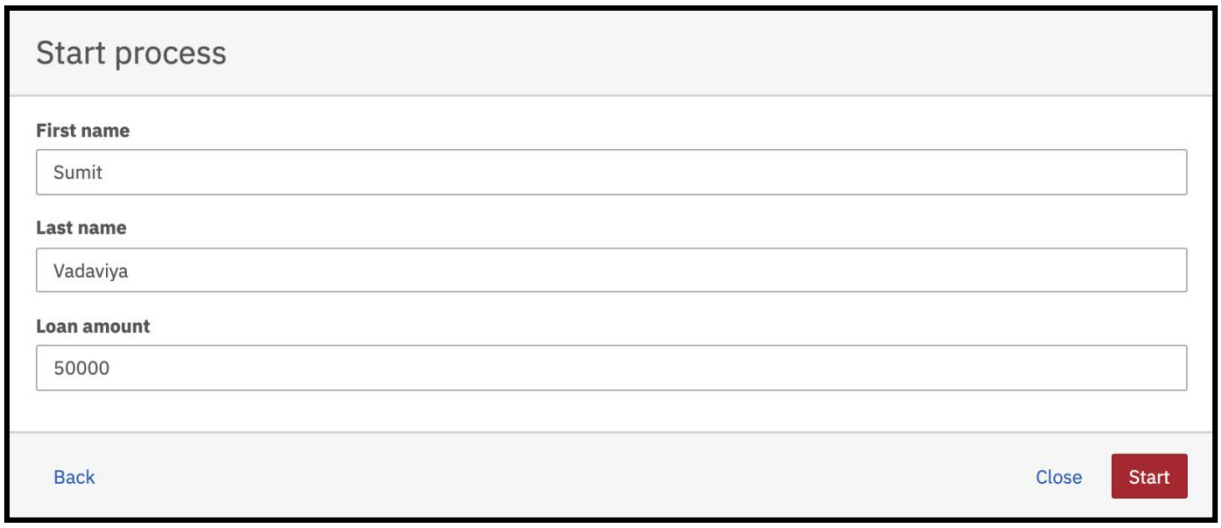

Fill-up the form and hit Start button.

As per process definition, after process start event executed, Review loan request user task is created and it is assigned to demo user.

User task Review loan request

Open the user task Review loan request

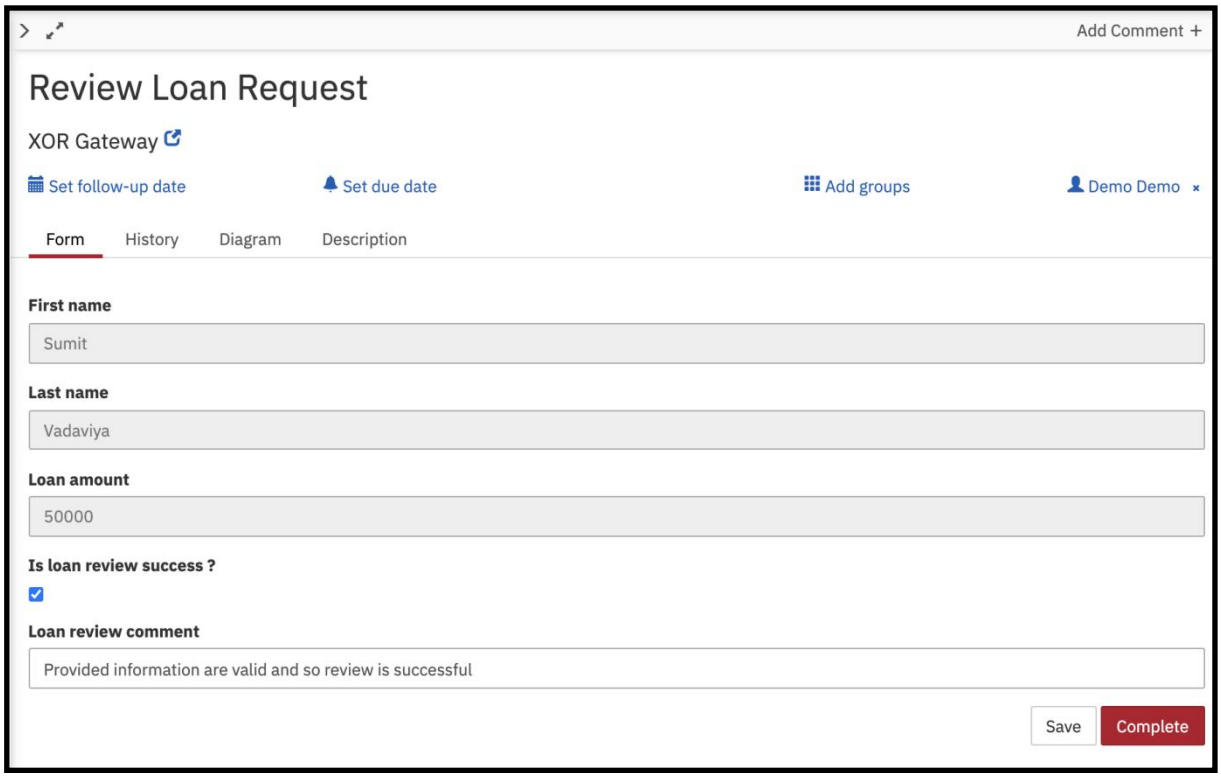

Form values:

Is loan review success ?: True

Loan review comment: Provided information are valid and so review is successful

Hit the Complete button to submit loan request review.

As per process definition, script task **Loan review success notification** will be executed to send notification of review success.

Observe tomcat console output

Dear Sumit Vadaviya, Your loan review is succedded with amount 50000
Review comment : Provided information are valid and so review is successful